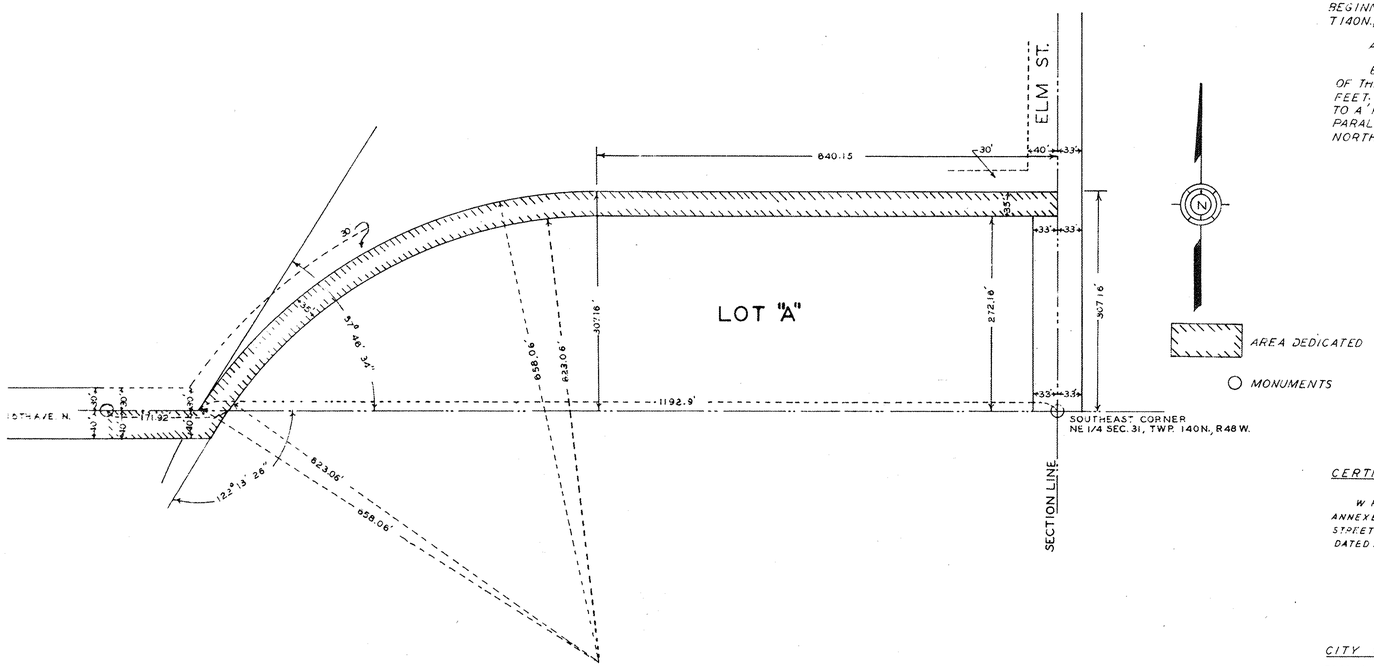

DESCRIPTION OF LAND DEDICATED FOR PUBLIC STREET AND TO BE KNOWN AS 15TH AVENUE NORTH.

BEGINNING AT A POINT ON THE QUARTER LINE WHICH IS 1192.9 FEET WEST OF THE SOUTHEAST CORNER OF THE NE 1/4 OF SECTION 31, T140N., R48W; THENCE NORTHEASTERLY AT AN ANGLE OF 57° 46' 34" ON A CURVE WITH A RADIUS OF 658.06 FEET TO A POINT THAT IS 307.16 FEET NORTH OF THE QUARTER LINE; THENCE EASTERLY ON A LINE THAT IS PARALLEL TO THE QUARTER LINE A DISTANCE OF 640.15 FEET TO THE EAST LINE OF SECTION 31; THENCE SOUTH ALONG THE SECTION LINE A DISTANCE OF 35 FEET; THENCE WESTERLY AND PARALLEL TO THE PRECEDING LINE A DISTANCE OF 640.15 FEET; THENCE SOUTHWESTERLY ON A CURVE WITH A RADIUS OF 623.06 FEET TO THE QUARTER LINE; THENCE WESTERLY ALONG THE QUARTER LINE TO THE POINT OF BEGINNING. THE FOREGOING BEING THE NORTHERLY 35 FEET OF LOT A OF THE NE 1/4 OF SECTION 31, T140N., R48W.

ALSO A PIECE OF LAND DESCRIBED AS FOLLOWS:

BEGINNING AT A POINT ON THE QUARTER LINE THAT IS 1323.0' WEST OF THE SOUTHEAST CORNER OF THE NE 1/4 OF SECTION 31, T140N, R48W; THENCE EAST ALONG THE QUARTER LINE A DISTANCE OF 1192 FEET; THENCE SOUTHWESTERLY AT AN ANGLE OF 122° 13' 26" ON A CURVE WITH A RADIUS OF 623.06 FEET TO A POINT WHICH IS 40 FEET SOUTH OF THE QUARTER LINE; THENCE WEST ON A LINE WHICH IS PARALLEL TO THE QUARTER LINE TO A POINT WHICH IS 1323.0' WEST OF THE SECTION LINE; THENCE NORTH 40 FEET TO THE POINT OF BEGINNING.

CERTIFICATE OF ACCURACY

W. P. TARBELL HEREBY CERTIFIES THAT THE ANNEXED PLAT IS A TRUE REPRESENTATION OF STREET DEDICATED AS ABOVE DESCRIBED BY RESOLUTION DATED July 12, 1949

W. P. TARBELL
CITY ENGINEER-FARGO-N.D.

NOTARIZATION

ON THIS [illegible] DAY OF [illegible] 1949 BEFORE ME PERSONALLY APPEARED W. P. TARBELL KNOWN TO ME TO BE THE PERSON DESCRIBED IN & WHO EXECUTED THE WITHIN INSTRUMENT & ACKNOWLEGED TO ME THAT HE EXECUTED THE SAME

MY COMMISSION EXPIRES [illegible]

NOTARY PUBLIC
CASS COUNTY, N.D.

CITY ENGINEER'S APPROVAL

THIS ANNEXED PLAT IS HEREBY APPROVED THIS [illegible] DAY OF June 1949

W. P. TARBELL
CITY ENGINEER FARGO, N.D.

COUNTY AUDITOR'S APPROVAL

PLANNING COMMISSION APPROVAL

APPROVED BY THE CITY PLANNING COMMISSION OF FARGO THIS 27 DAY OF June 1949

[signature]
PRESIDENT

CITY COMMISSION APPROVAL

APPROVED BY BOARD OF CITY COMMISSIONERS & ORDERED FILED THIS [illegible] DAY OF [illegible] 1949

[signature]
W. G. JOHNSON
AUDITOR-FARGO-N.D.

Copy

CITY OF FARGO
DEPARTMENT OF PUBLIC WORKS
DIVISION OF ENGINEERING & RECORDS

DEDICATION PLAT
FOR
15TH AVENUE NORTH

SCALE 1" = 100'

DOCUMENT NO. 280010
STATE OF NORTH DAKOTA
COUNTY OF CASS

I HEREBY CERTIFY THAT THE ABOVE INSTRUMENT WAS FILED IN THIS OFFICE FOR RECORD ON THIS 18 DAY OF July A.D. 1949 AT 11:01 O'CLOCK A.M. & WAS DULY RECORDED IN BOOK D OF _____ PAGE 82

J. D. RUNSVOLD
REGISTER OF DEEDS

BY _____ DEPUTY

AUDITOR'S OFFICE
COUNTY OF CASS, NORTH DAKOTA
July 18, 1949
Delinquent Taxes and Special Assessments, or installments of Special Assessments, paid and transfer entered.
Mae Classon Auditor
_____ Deputy

D 8-21